Site Furniture
AusCast Custom

Large standard range • Custom work is welcomed

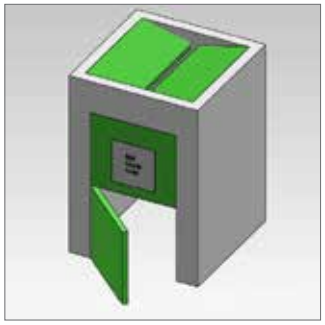

12600
Ayres - Concrete
Heat Bead Containment Bin
600 x 600 x 850

13007
750 Sphere – White
Site Painted

13009
750 Sphere - Smooth Silver
Site Painted

13020
Dome Double 750, 450 & 300
Auscast Smart Grey Smooth
Site Painted

13021
Dome Double 750, 450 & 300
Auscast Smart Grey Smooth
Site Painted

13022
Dome 750, 450 & 300
Auscast Smart Grey Smooth
Site Painted

13023
Dome 750, 450 & 300
Auscast Smart Grey Smooth

13025
Impression Dome 750 x 375h
With 60r x 100 Long Spigot

13097
Dome 300 x 450h
Auscast Smart Grey Smooth
Site Painted

13098
Dome 300 x 450h
Auscast Smart Grey Smooth
Site Painted

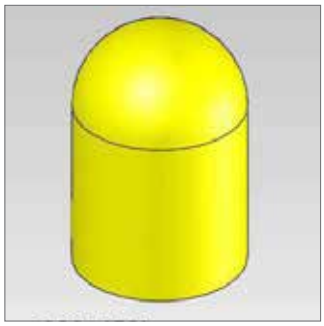

13099
Dome 300 x 450h
Auscast Smart Grey Smooth
Site Painted

14002
Column 320r x 3100h

Site Furniture
AusCast Custom

Large standard range • Custom work is welcomed

16174
Aquarius Accessible
Smart Grey Concrete

17450
Nebula
930r x 450h

21944
Bus Shelter & Precast Panels
Bush Hammer

21998
Concrete 300 Diameter
Columns & Shelter

22000
Curved Paver

22008
Parliament Grass Growing Pavers
300 x 300 x 170h

22011
Criss Cross Paver

22012
Criss Cross Paver

22109
Gecko - Interlocking Pavers

24208
Auscast Table Tennis - Concrete
2740 x 1525

24850
SkateScootRide PADS
Clusters Beginner 11 Area 3 x 3

24863
Modular Ramps

Site Furniture
AusCast Custom

Large standard range • Custom work is welcomed

24864
Modular Ramps

25209
Narrabeen - Site Painted
600 x 600 x 600

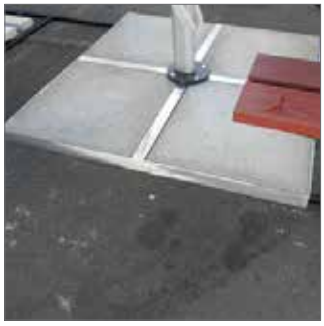

28205
Umbrella Base

29207
Soakstone Pavers

29382
Soakstone & Grate

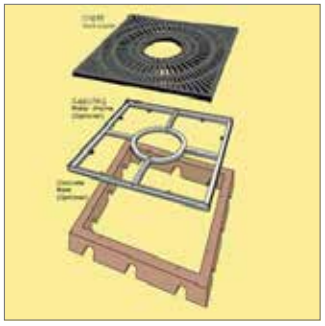

29502
Custom Precast Tree Pit Walls
& Grates

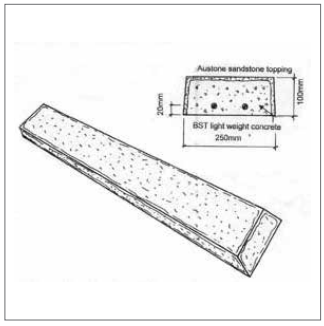

31360
Bridge Planks - Sandstone Clad
Reinforced Concrete Load
Rated - 30.5kNm

31370
Boardwalk Concrete Plank

43629
Cola Enhanced Clairgate
8.4 x 9.4

51490
5 Star Auckland Automatic Toilet
2D Concrete & Stainless Steel

54691
Roocycle ETcustom Design
Springbrook PT

69202
Mago Pausa Bench - Cairns

Site Furniture
AusCast Custom

Large standard range • Custom work is welcomed

69775
Mago Sand Pillow 8x8 & 8x14
800 x 1400 x 420h - 1100kgs

69815
Mago Confetti
880 x 410 - 425kgs

69870
Mago Ponent Ends & Roocycle Slats - Bench, Planter & Setting

70991
Bellitalia - Multiline

70992
Bellitalia - Magnum

71199
Auscast Building

71401
Auscast Building - 12 Tonnes
3.5 x 3.6 x 2.5h

71411
Auscast Building - 47 Tonnes
3.5 x 11.5 x 2.5h

89003
Custom Precast & Site Painted

89005
Custom Precast & Site Painted

95802
Babylon Greengrowth, Steps & Deck

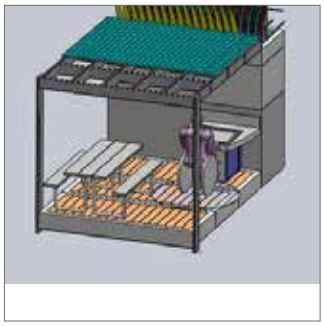

95840
Babylon Greengrowth Roof, Shelter, Pergola, Deck, Setting & BBQ